| Rev | Description | Changed by | Appr. by | Date |
|---|---|---|---|---|
| | | | | |
| | | | | |

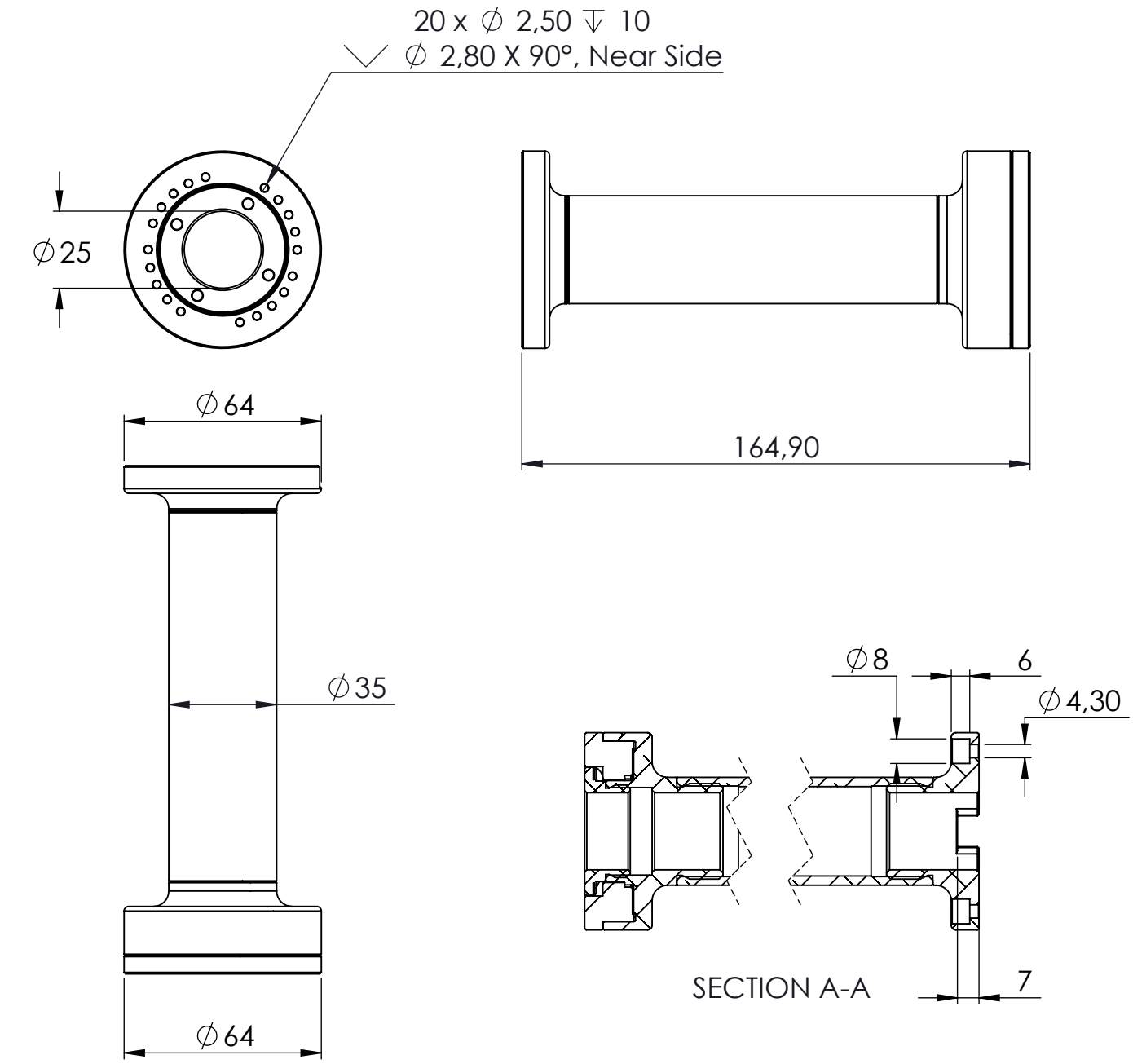


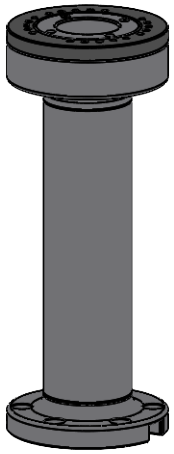

| | | | | | |
|---|---|---|---|---|---|
| Company<br>Brodit<br>Gesällvägen 8<br>546 34 Karlsborg<br>Sweden | Item<br>215573 | Drawn<br>SJ | Date<br>2013-02-11 | Rev<br>A | Unless otherwise specified:<br>Dimensions in mm.<br>Tolerance<br>Milled ±0,10<br>After bending ±0,30 |
| | Item name<br>Pedestal mount fixed with swiveling, 165mm.LHa | Approved | Date<br>2014-08-27 | | |
| | Material | Sheet 1/1 | Scale 1:2 | Size A4 | |